TRATSON

Limescale Protection in Harmony with Nature

Operating and Installation Instructions for ENK-01, ENK-02, ENK-03, ENK-04 Quattro Power V3.1

CONTENTS

1. SAFETY INSTRUCTIONS S.3
2. SCOPE OF DELIVERY S.5
3. INSTALLATION S.6
4. COMMISSIONING S.16
5. TECHNICAL DATA S.24
6. WARRANTY S.26

We care about you

Thank you for choosing a Tratson limescale protection device. You have selected a product that represents decades of professional experience and innovation. During the development of this elegant device, we always kept your needs in mind. This ensures you consistently achieve the best possible results every time you use it.

Please pay close attention to our safety and warning instructions, which are specifically marked with **CAUTION**.

Visit our website www.tratson.ch, where you will find:

- Useful application tips, current brochures, and the latest information.
- Accessories, consumables, and original spare parts for your device.
- Installation videos and answers to frequently asked questions.

1.0 Safety Instructions

Please carefully read these operating instructions completely before installing and commissioning the device. They contain important safety instructions and information on handling the device.

Additionally, this manual includes all information required for documentation purposes to comply with applicable regulations. Therefore, after commissioning, the operator must keep this manual in a safe place and always within easy reach throughout the lifespan of the device. If applicable, pass this manual on to subsequent users.

1.1 Intended Use

The system (device, power supply, and connected coils) is intended for stationary indoor use at the installation site, following the safety instructions below. Installation must comply with the mounting instructions provided.

The system is designed for indoor use in dry rooms, typically installed in an area (mostly in basements) that maintains a distance of 1 meter (depending on the device size) from devices sensitive to electromagnetic fields.

1.2 Safety for Children and Vulnerable Persons

CAUTION: The device must not be installed by children or people with reduced physical, sensory, or mental capabilities or insufficient knowledge.

CAUTION: Children must not play with the device or its components. Ensure that children and vulnerable people cannot access the power connection, the device, or the coils.

1.3 General Safety

- Never open the device without first unplugging the power plug or adapter.
- The appliance may only be operated with safety extra-low voltage in accordance with the labelling on the appliance.
- If attached seals, fuses or the protective film of the display are damaged or have been removed, all warranty claims and rights of return are void.
- If any cables (power adapter or coil connections) are damaged, do not use the device.
- The appliance may only be used with the power supply unit supplied.
- Connect only the supplied power adapter or power cable to a power outlet. Ensure the coil cable ends are never inserted into a power outlet.
- If the power adapter or cable is damaged, it must be replaced with a special connecting cable available from the supplier
- The device and coils must not be installed in environments with occasional or permanent explosive or corrosive gases.
- The operation of the system relies on localized electromagnetic fields that reduce deposits depending on the application. These fields may affect the immediate surroundings of the coils. Generally, a distance of approximately 1 meter from the coils is sufficient to operate sensitive devices safely.
- Never connect or disconnect coil connections when the device is powered on (risk of sparks).
- After maintenance on the piping system, ensure all coil connections (plugs) are connected before restarting the system.
- Observe all other applicable safety measures regarding electrical equipment.

2.0 Scope of Delivery

No. 1: 1x Limescale protection device
No. 2: 2x Pipe mounting brackets
No. 3: 4x Copper wire 1.0 mm² / 850 cm
No. 4: 1x Set (4x wall mounting screws, 4x washers, 4x wall plugs)
No. 5: 20x Cable ties
No. 6: 1x Power supply unit (cable length = 1 m);
Accessories: Extension – 3 m, Art. No.: ERS-003

Tools required for installation:
1x Wire stripper
1x Side cutter
1x Small Phillips screwdriver (size PZ0)

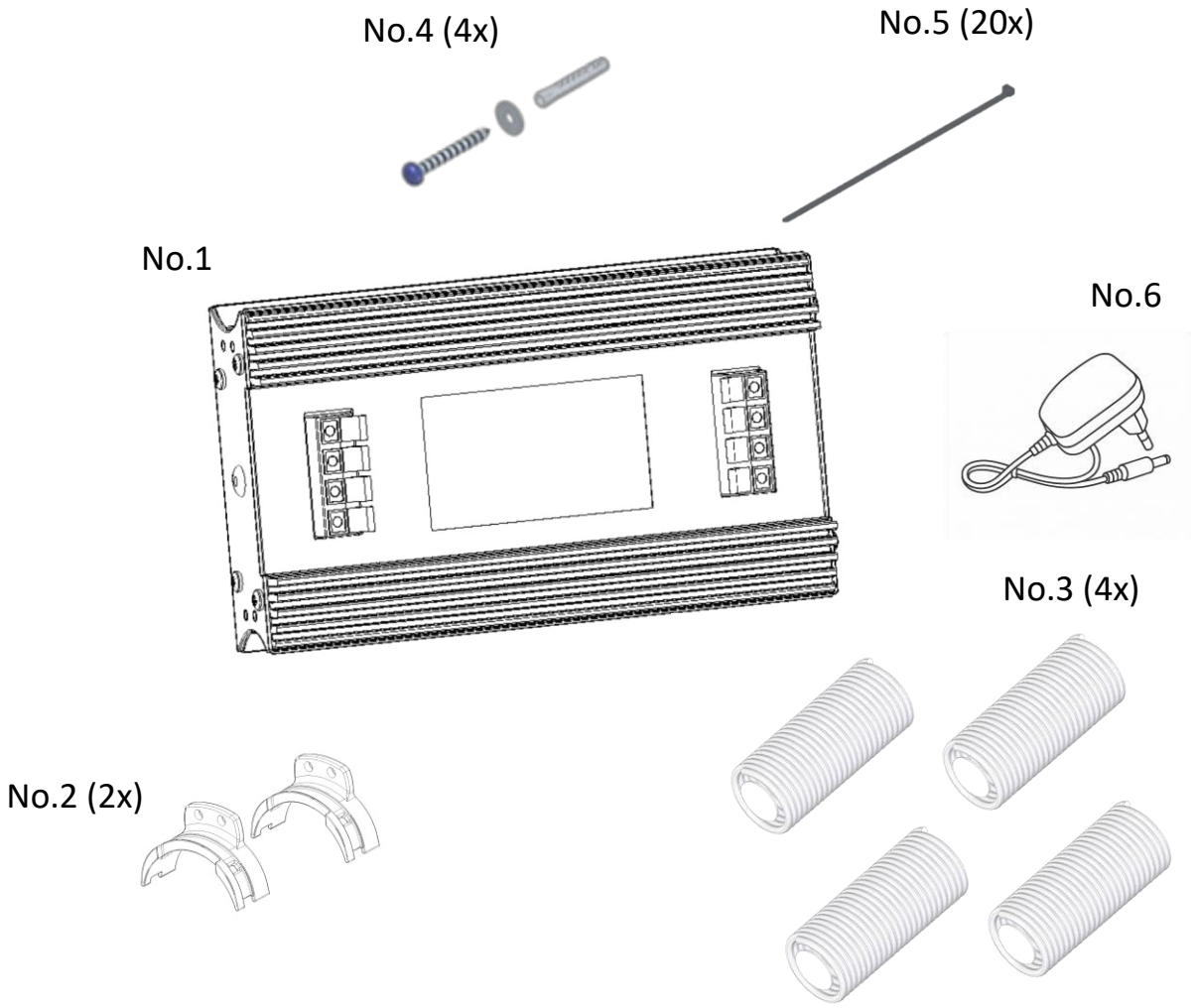

3.0 Installation

Choose an installation site that meets the following conditions:

- The device must not be exposed to ambient temperatures exceeding 60 °C. Therefore, do not install it near a heater or in direct sunlight.
- As the device is typically installed in a basement, the mounting height should be at least 110 cm above floor level to avoid potential water damage.
- Select the shortest possible distance between the device and the coils mounted on the pipe.

3.1 Installation Variants

The limescale protection device can be mounted in one of the following ways: **vertically on the main water pipe**, **hanging from the main pipe**, or **mounted to the wall**.

3.1.1 Variant 1: Vertical main water pipe

To install the device, first attach the two pipe mounting brackets (included in delivery) to the bottom of the device.

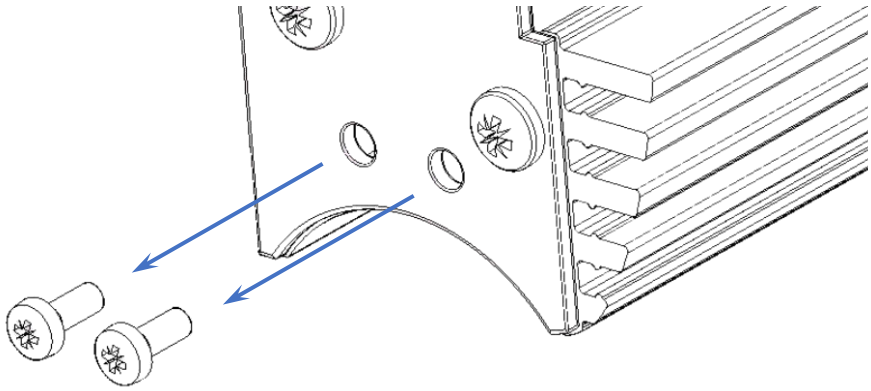

Remove the four M3x16 screws at the bottom of the housing.

Then reattach them, fixing the pipe brackets firmly to the underside of the device.

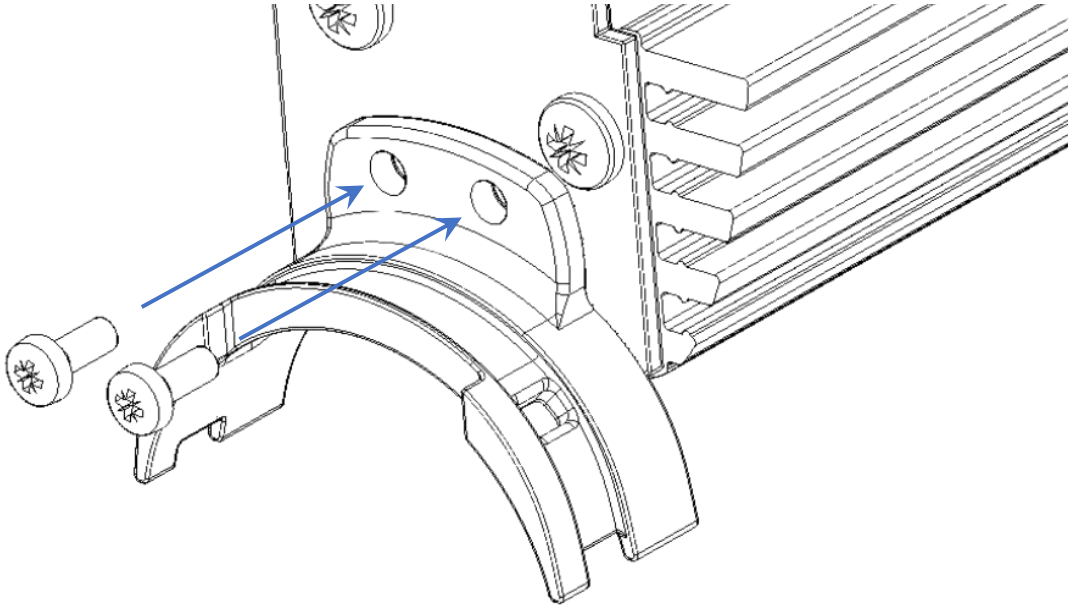

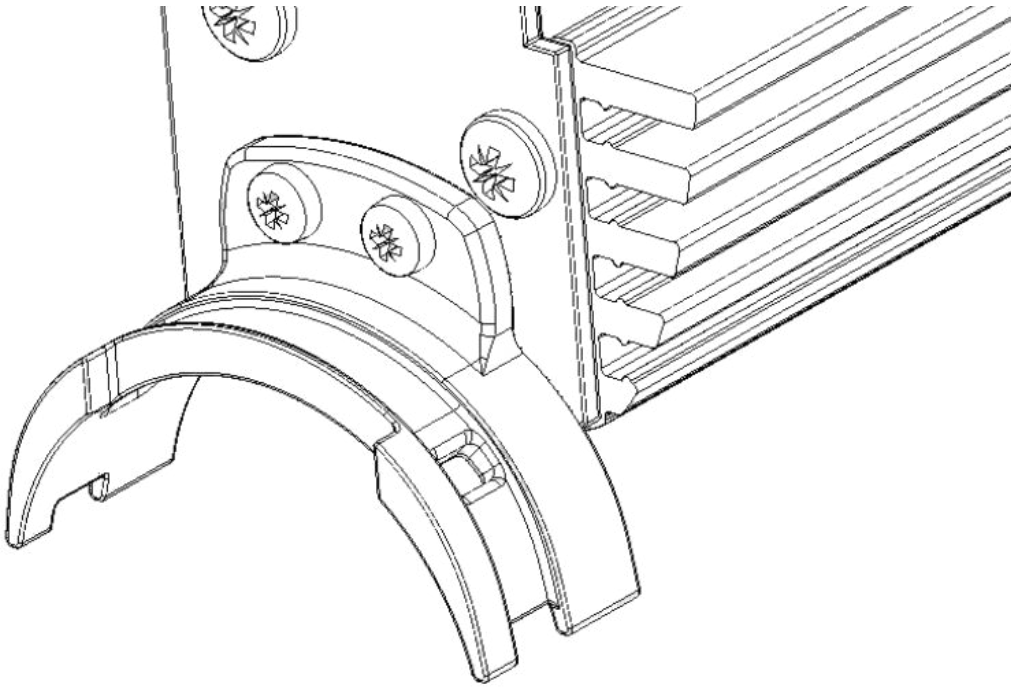

Once both brackets are attached, place the device onto the main water pipe.

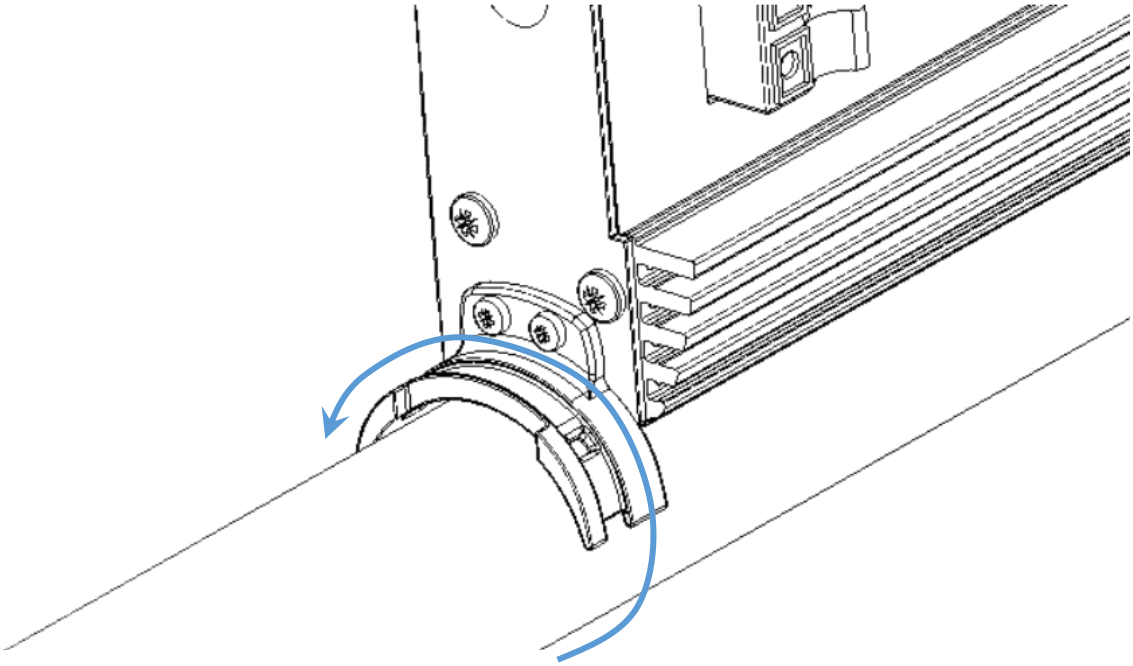

To secure it, thread one cable tie along the designated groove and tighten it. For pipes under 30 mm in diameter, guide the cable tie through the two mounting holes and pull tight.

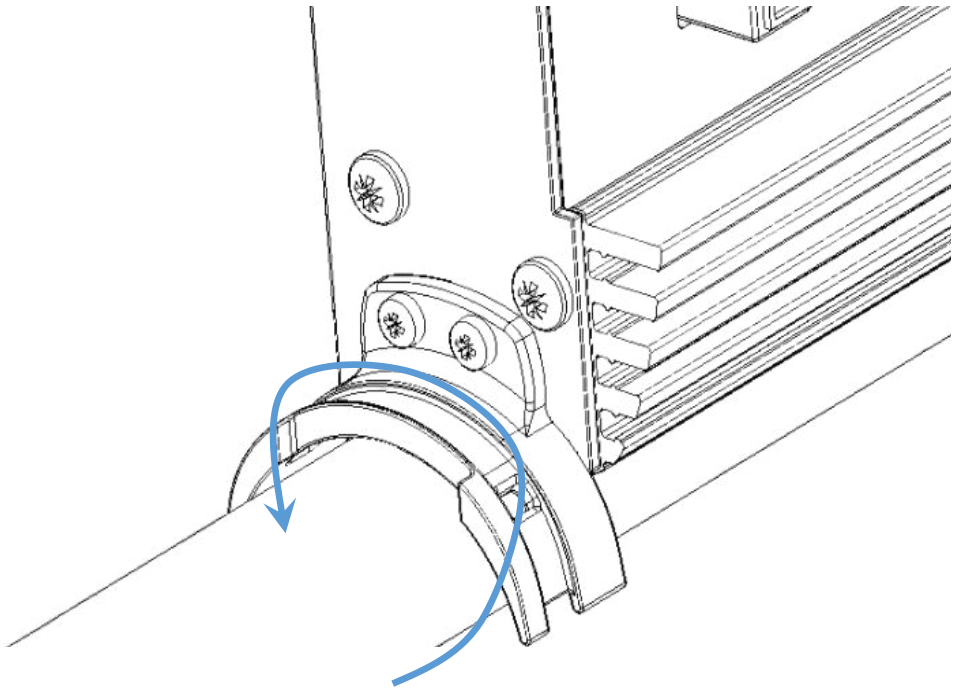

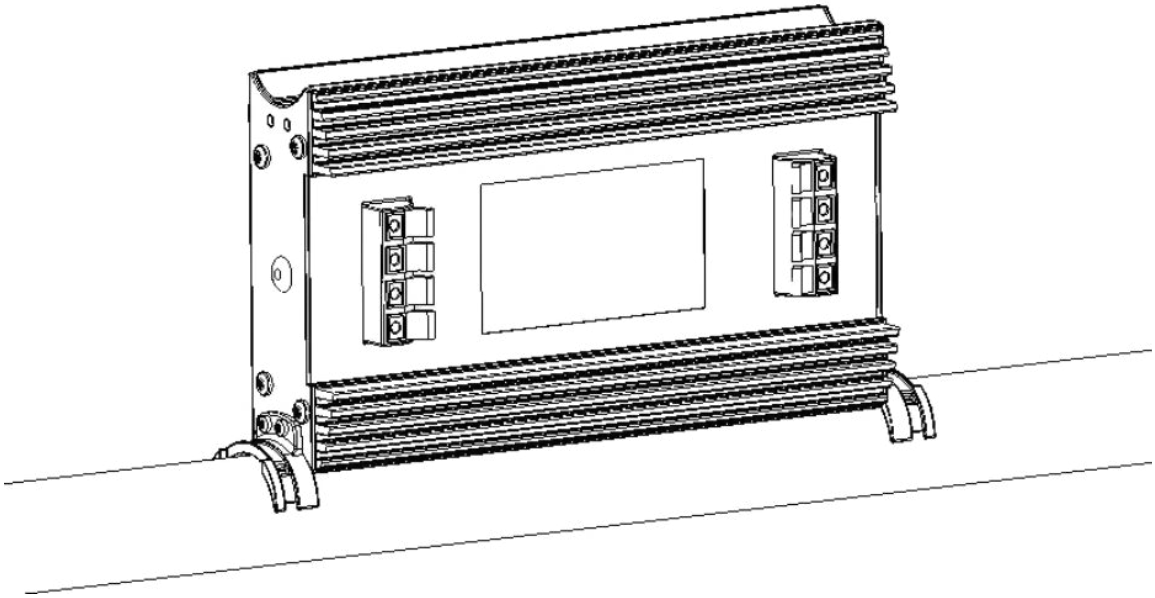

The device is now securely installed in an upright position.

3.1.2 Variant 2: Hanging from the main water pipe

To install the device in a hanging position, first attach the two included pipe mounting brackets to the top of the device. Remove the four M3x16 screws at the bottom of the housing.

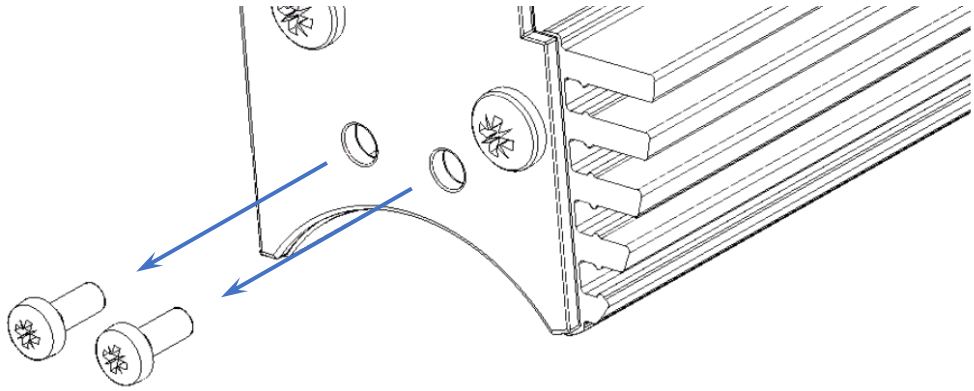

Then reattach them to the top, fixing the brackets securely in place.

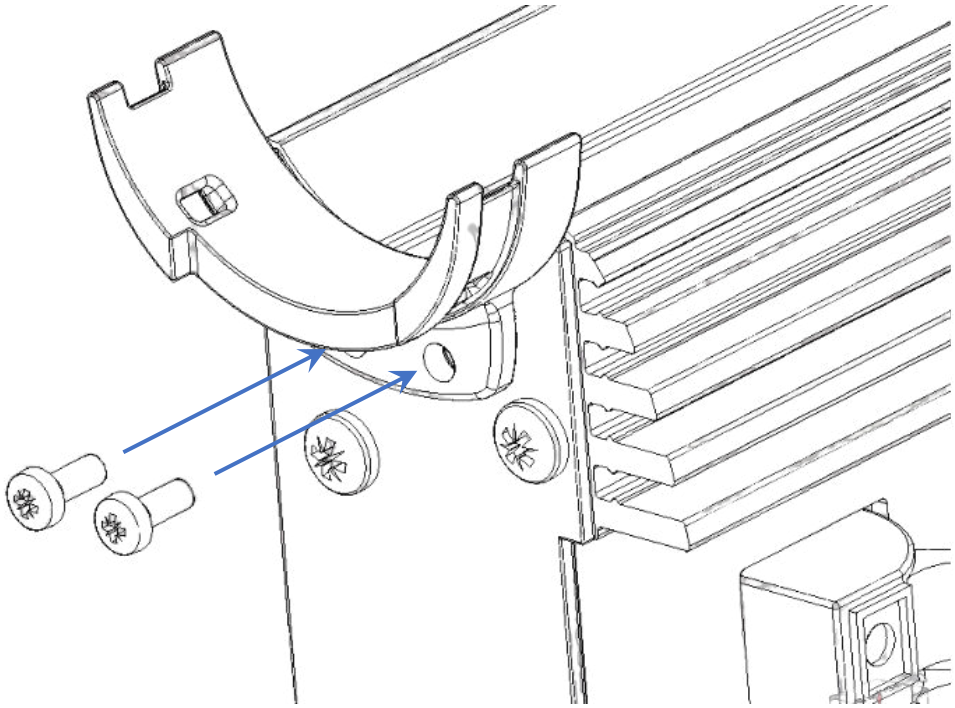

To secure the device, thread one cable tie through the designated groove and tighten it. For pipes under 30 mm in diameter, guide the cable tie through the two mounting holes and pull tight. The device is now securely mounted in a hanging position.

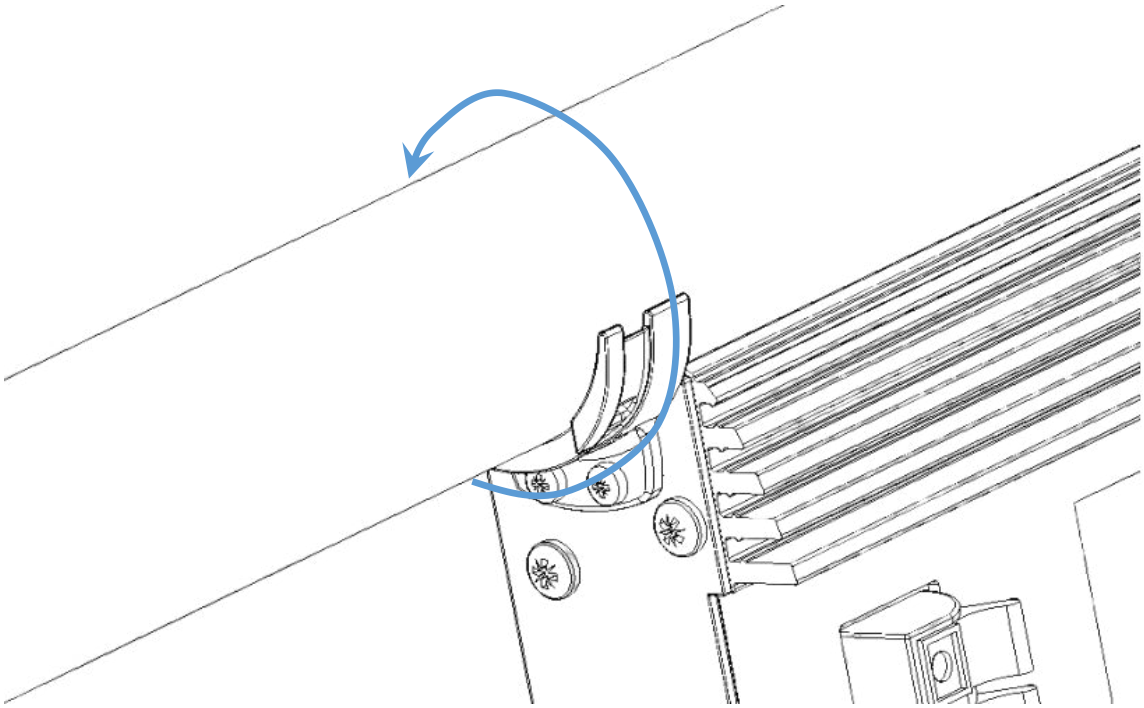

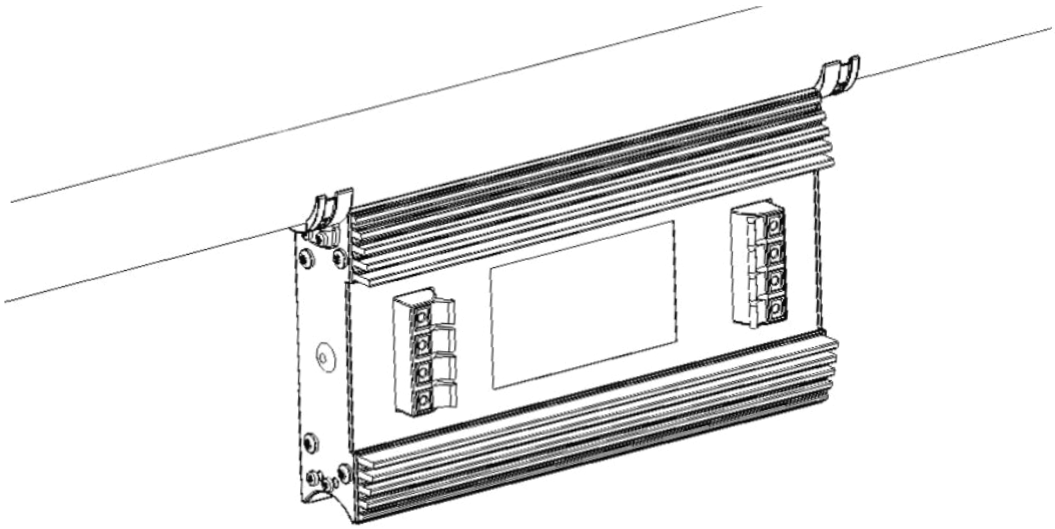

3.1.3 Variant 3: Wall mounting

To mount the device on a wall, first swap the two side plates. Remove the four Phillips screws (4.2 × 8) and flip the side plates. One plate contains a blanking plug, which must also be rotated accordingly.

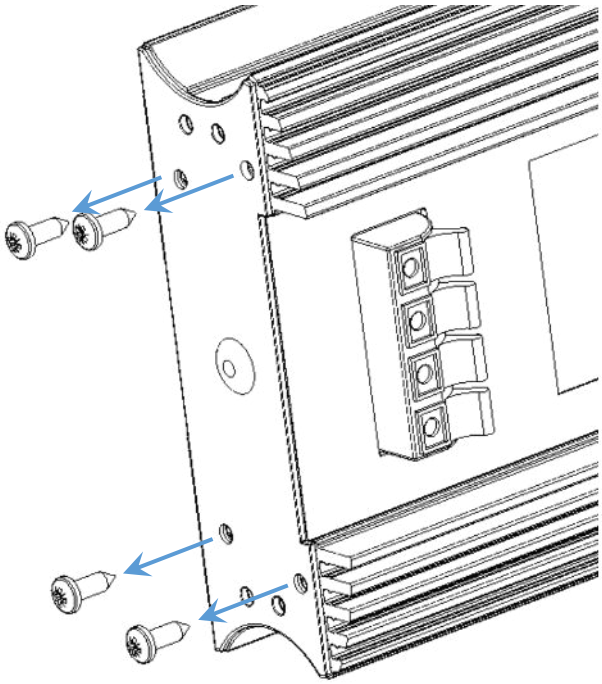

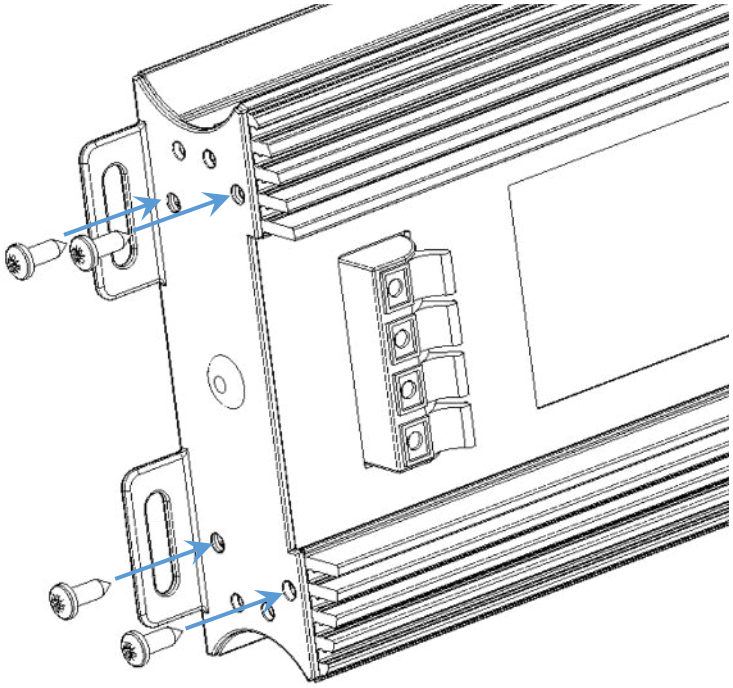

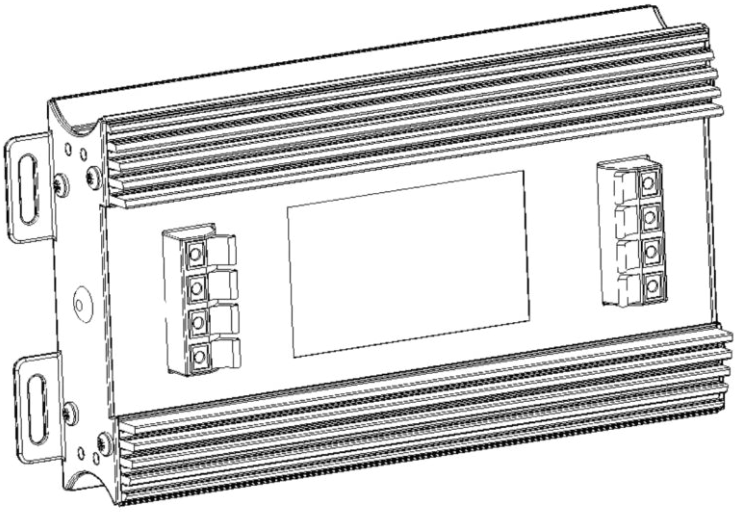

The device is now ready for wall installation: At the chosen installation site, drill four holes using the following hole pattern = 80 x 268 [mm]

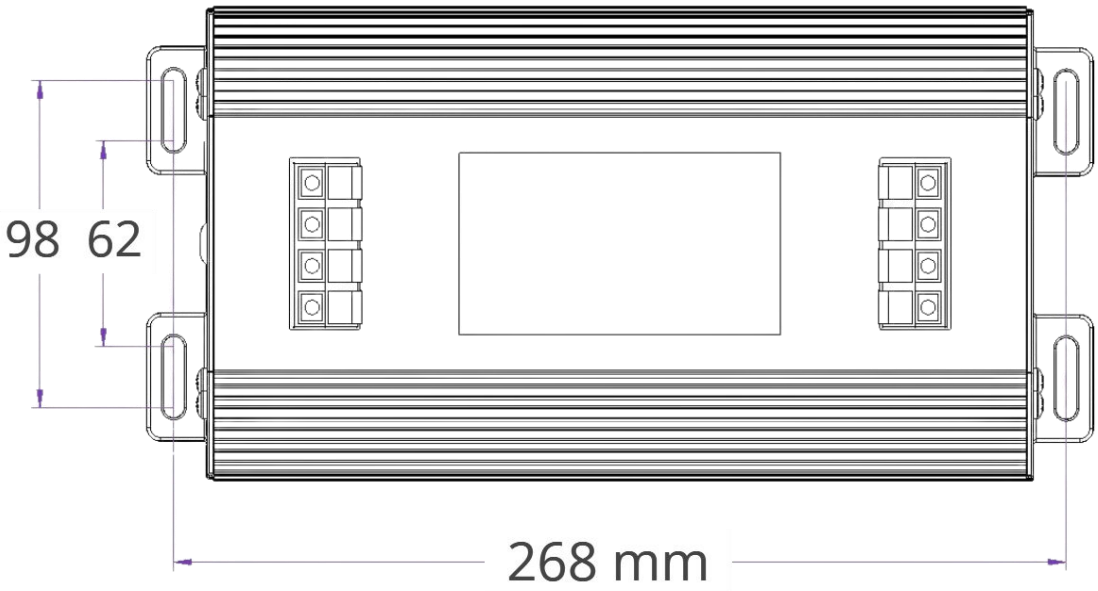

with a diameter of 5 mm and a depth of 35 mm for the included wall plugs. Insert the plugs and use the four screws and washers to mount the housing to the wall.

3.2 Installation of the Coils

The induction coils are created by winding the supplied cables around the main water pipe. If the pipe is insulated, **the insulation must first be removed** to ensure direct contact with the coils. This process is simple: The plastic film can be cut with a pocket or kitchen knife. Underneath are polystyrene half-shells secured with wire, which can also be removed easily. The silver end cap is then moved to the cutting edge, reinstalled and secured with the provided cable ties. If desired, the insulation can be reapplied over the coils afterward.

Depending on the layout of your piping, the coils can be mounted horizontally, vertically or in a mixed arrangement – provided that there is a **minimum distance of 25 cm between each coil**. Installation may take place before or after the water meter, depending on available space.

Important: If chlorine filters, ion exchangers, salt-based softeners, or reverse osmosis systems are in use, the coils must be installed downstream of those devices.

The limescale protection device provides four terminal connections (1–4) for the coils:

Terminal 1: Coil 1
Terminal 2: Coil 2
Terminal 3: Coil 3
Terminal 4: Coil 4

Note: The device requires all four terminals to be connected. If one or more coils are not used, the corresponding terminals must be bridged with a wire jumper.

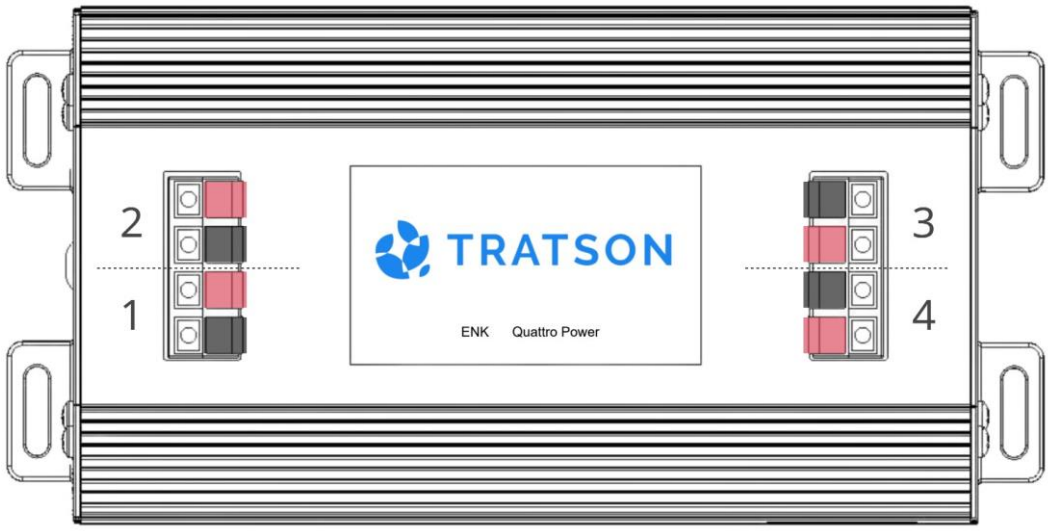

3.2.1 Installing the Induction Coils

To wind the coils, proceed as follows:

1. Insert one stripped end of the coil wire into terminal 1 (black) of the device.
2. Route the cable to the designated mounting point on the pipe.
3. Fix the starting point of the wire to the pipe using one of the provided cable ties.
4. Wind the cable **in the direction of water flow, clockwise**, around the pipe until you reach 25 to max. 30 turns.
5. Secure the end of the wire with another cable tie.
6. Insert the second stripped end of the wire into terminal 1 (red).
7. The connecting wires of the coils (supply and return) can be secured along the water pipe using cable ties or routed through a cable duct.

Repeat the same procedure for coils 2 to 4.

Please shorten any excess cable – do not coil or bundle it.

Coils may be electrically connected in series. Electrical parallel connection of the coils is not permitted. This requirement applies exclusively to the electrical connection of the coils and not to their physical arrangement on the water pipes.
A **minimum distance of 25 cm** must be maintained between two adjacent coils.
A maximum of 8 coils should be connected per device in total.

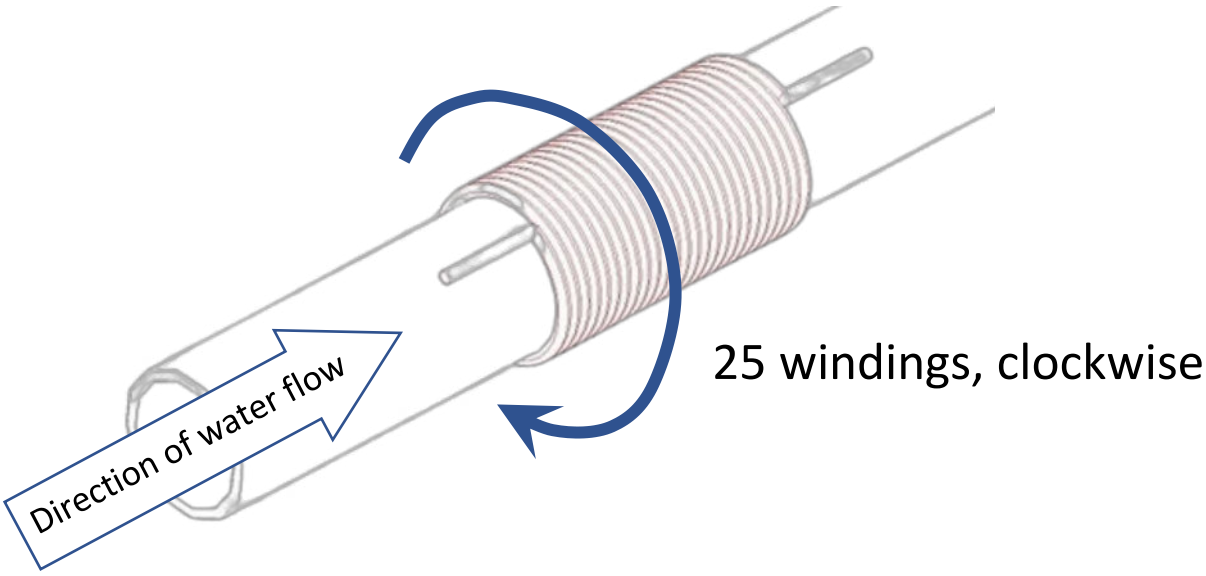

4.0 Commissioning

After installing the limescale protection device and mounting the coils, connect the power adapter to the device and plug it into a wall socket (max. 230 VAC). As soon as the device is connected to power, the display activates and shows the **TRATSON logo** on the start screen for approximately five seconds.

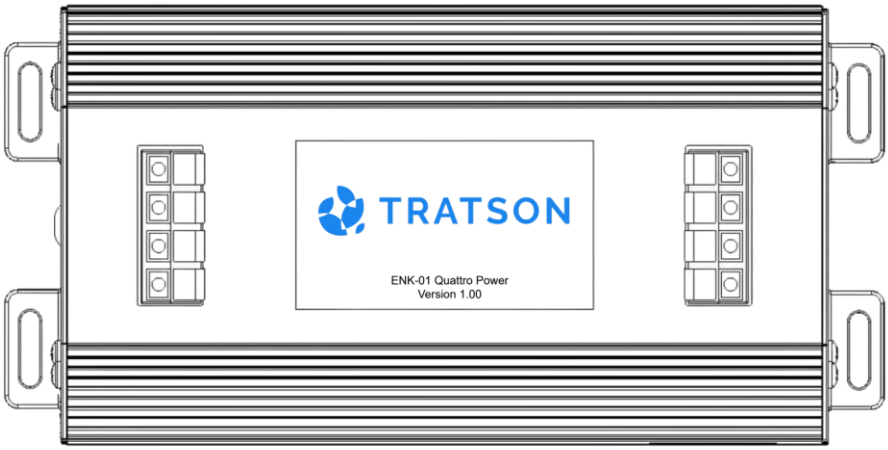

4.1 Home – Screen

After start-up, the start screen automatically switches to the **Home Screen**, which serves as the central information display.

Note: If no touch interaction occurs for 60 seconds, the screen switches off automatically. Touch the display anywhere briefly to reactivate it.

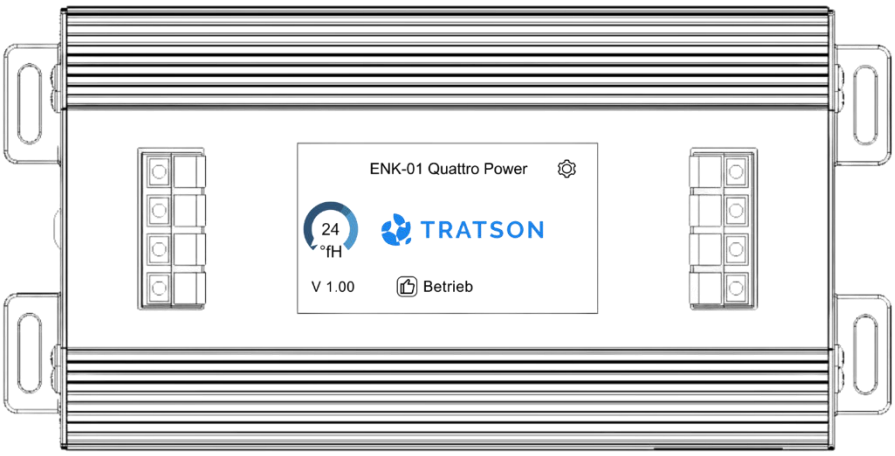

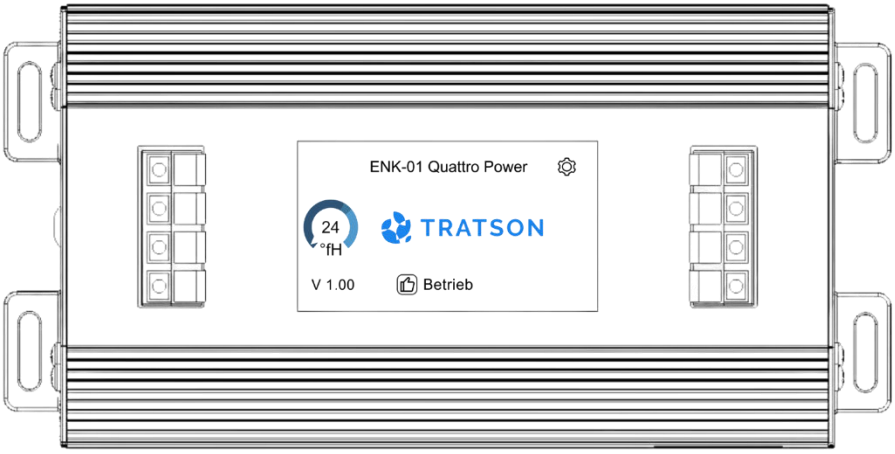

Device Type: ENK-01 Quattro Power

Software Version: V 1.00

Water Hardness: 24 °fH (set by user)

Operating Indicator: Running

Error Indicator: Check Coils

Settings: Tap briefly to open the settings menu.

4.2 Select an Action

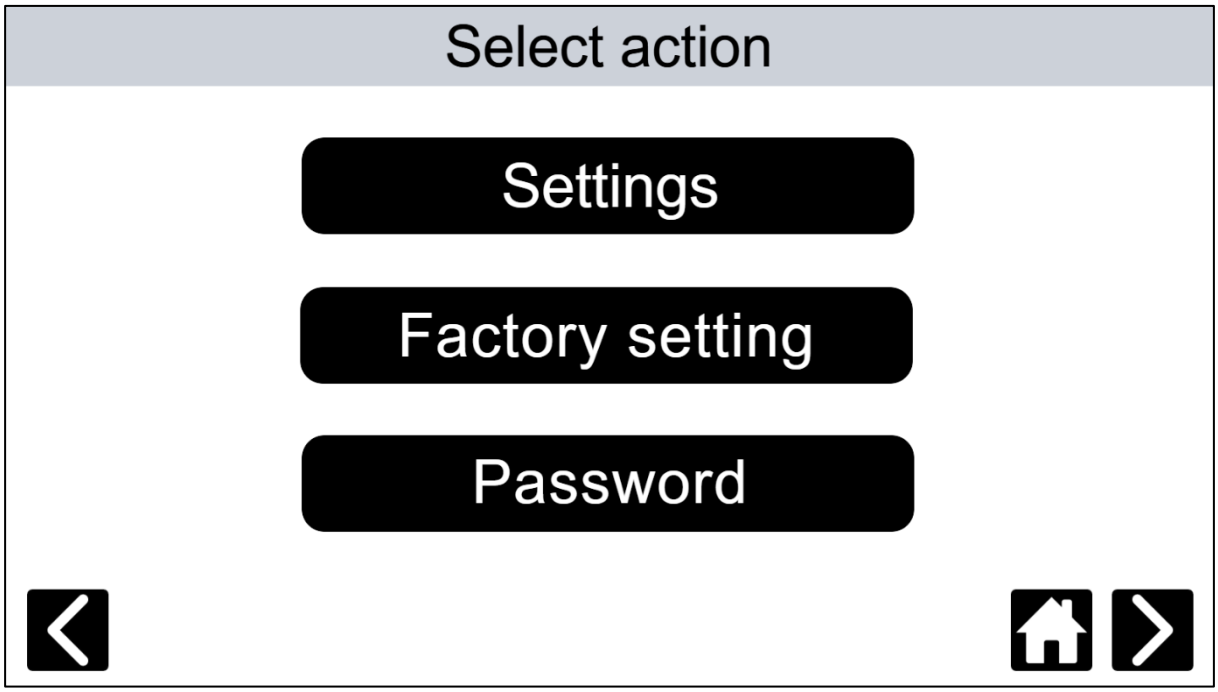

Go back one screen

Proceed to the next screen

Return directly to the Home Screen

Settings: Customise the device configuration.

Factory Settings: Restore the original default configuration.

Password: Protected section for authorised dealers only.

Note:

Any selected setting is saved immediately – no additional confirmation is required. Changes can be made at any time.

4.3 Language Selection

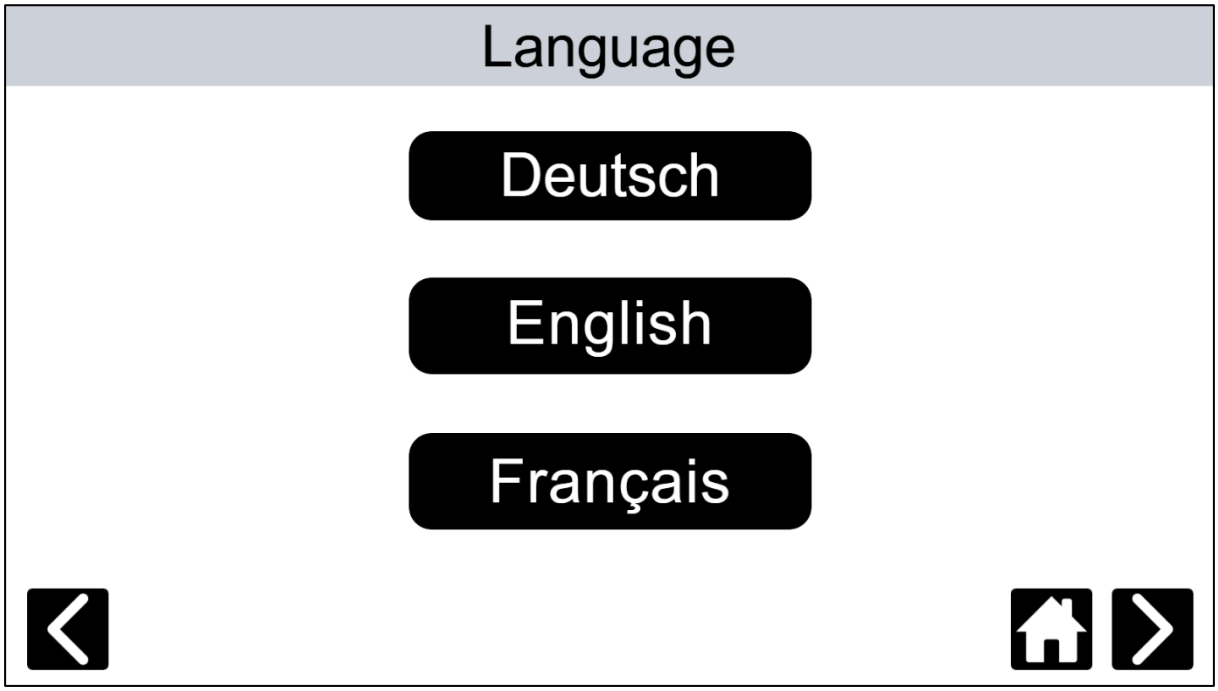

Please select your preferred language and tap the arrow to continue.

4.4 Screen Orientation

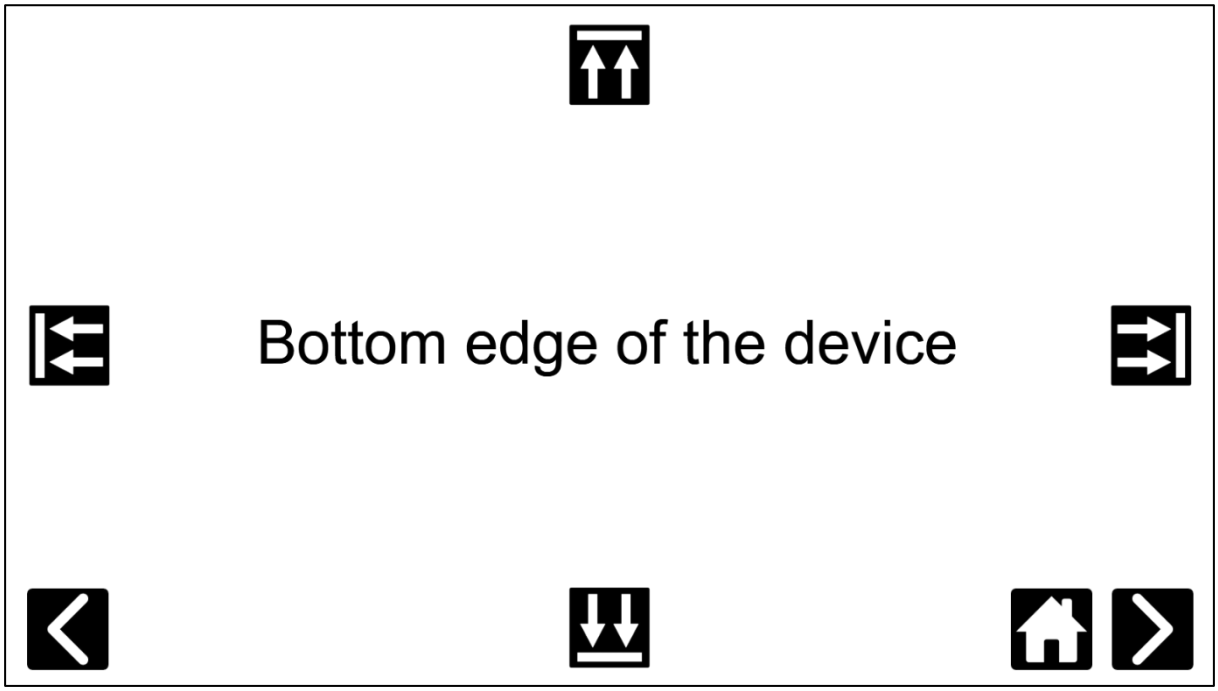

Align the screen based on the bottom edge of the device, depending on your preferred orientation (horizontal or vertical). Then tap the arrow to continue.

4.5 Pipe Material

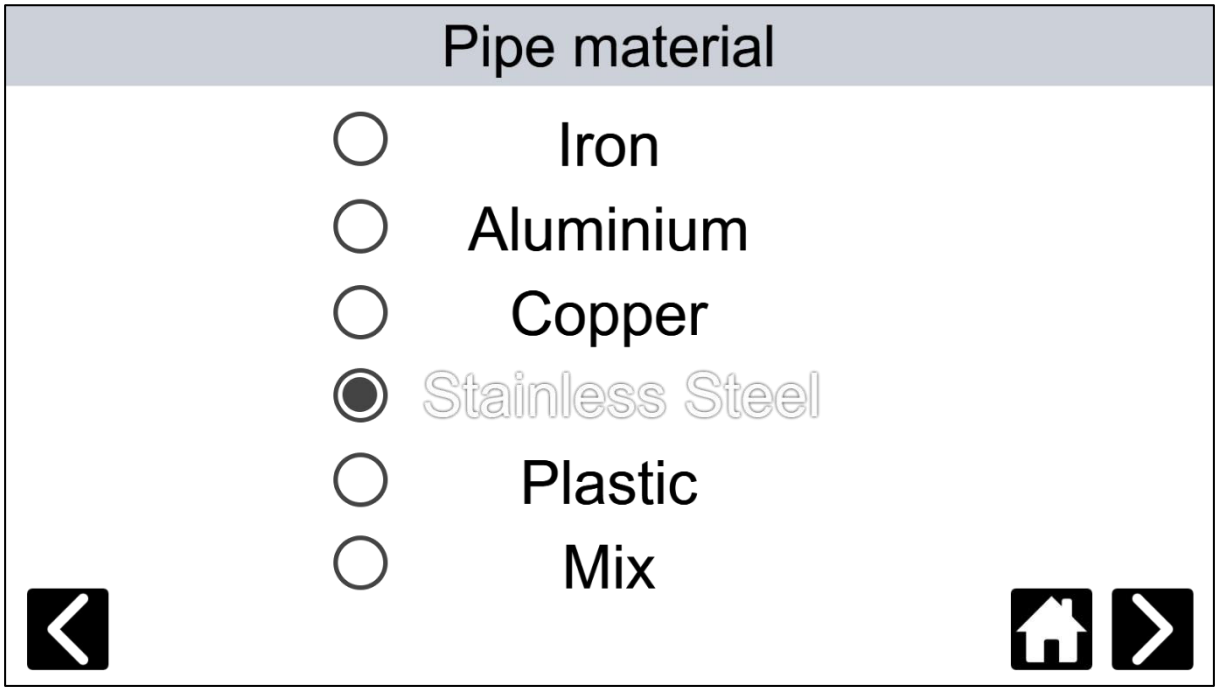

Select the material of your water pipes. If different materials are used in your installation, select **“Mix”**. Then tap the arrow to continue.

4.6 Water Hardness

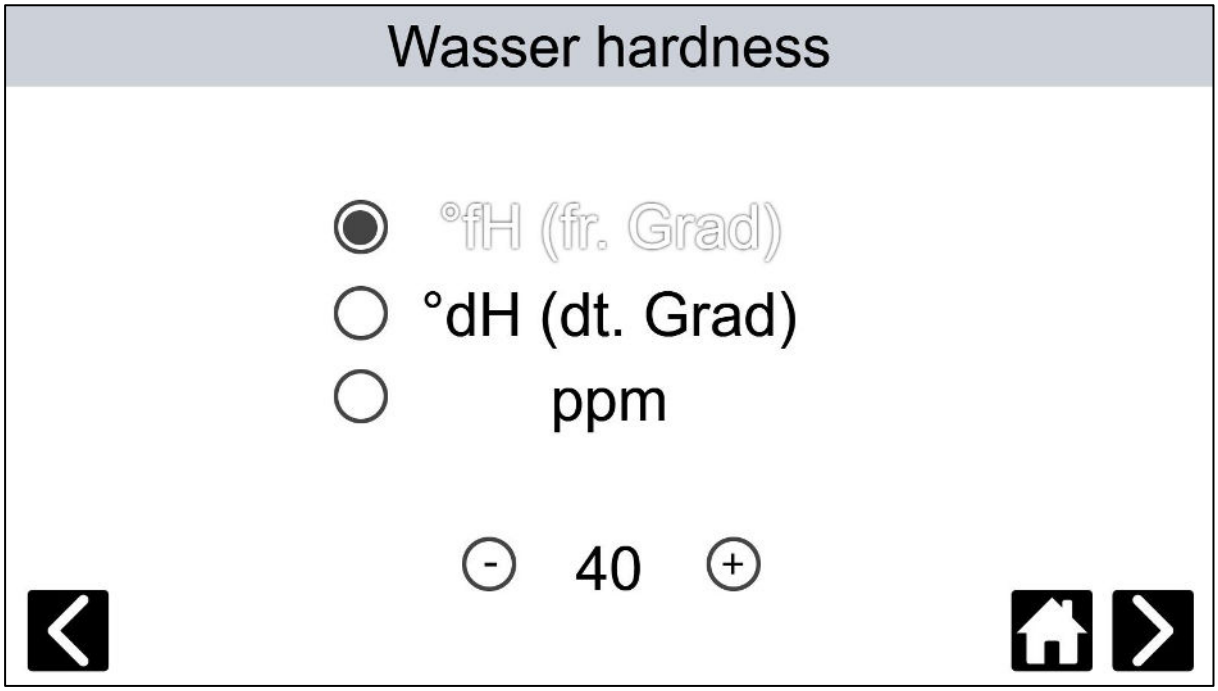

Select the unit of measurement you want to use for water hardness.
Use the **+** and **–** buttons to set the local water hardness value.

If you do not know your water hardness, you can find this information at:
your **local municipal office, your water supplier or online at our website:**
https://wasserhaerte.tratson.ch . Then tap the arrow to continue.

CAUTION:
If you previously used a conventional salt-based softening system (ion exchanger), it is essential that you reconfigure all household appliances (e.g. dishwasher, coffee machine, etc.) to reflect the current water hardness. Your municipality or water supplier can provide this information.

4.7 Wasser Revitalisation

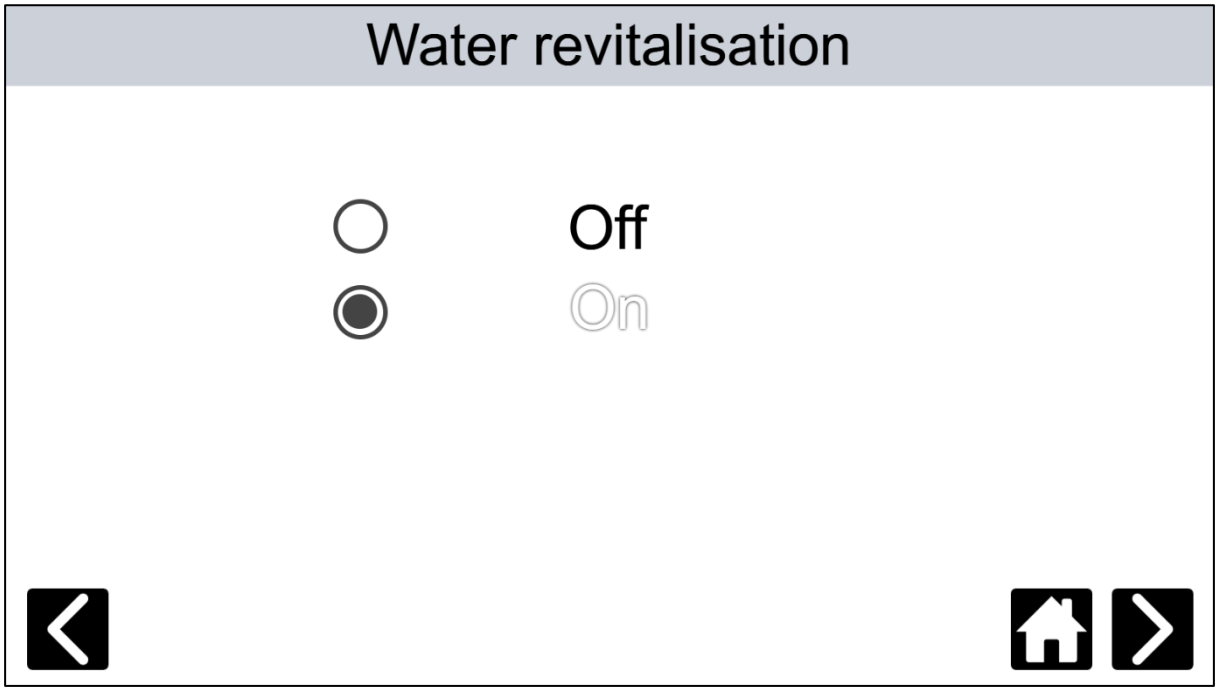

Choose whether you wish to activate the integrated water revitalisation feature. Tap the arrow to return to the Home Screen.

Info:
*The integrated water revitalisation uses a **levitation function**, where the water is swirled – much like in a natural mountain stream. This process positively influences the water structure and helps restore it to its original, natural state.*

Many users find this water to be smoother in taste. It is believed to be more easily absorbed by the body, which can promote a higher daily water intake.

Although the exact scientific mechanisms are not yet fully explained, it is widely agreed that this form of water treatment can only have positive effects on water quality and personal health.

5.0 Technical Data

Height:	[mm]	145
Depth:	[mm]	55
Length:	[mm]	290
Weight:	[kg]	1.0
Voltage:	Volt	100 – 240
Frequency:	Hz	50/60
Ambient temperature	°C	10 – 60
Power consumption:	$W_{MAX.}$	15

The technical specifications are also printed on the type plate on the outside of the device.

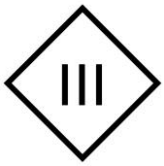

Protection class III - This device operates with safety extra-low voltage (SELV/PELV) according to IEC 61140 and must not be connected to higher voltages.

AC/DC adapter - This device operates exclusively with an external AC/DC adapter. Use only the supplied power adapter.

The device is intended for indoor use in dry environments.

Dispose of the packaging in the appropriate recycling bins.

To protect both the environment and your health, recycle electrical and electronic devices responsibly. Do not dispose of them in household waste. Bring used equipment to your local recycling facility.

EU- Declaration of Conformity

Manufacturer:	Tratson AG
Adress:	Mellingerstrasse 19 CH - 5413 Birmenstorf Switzerland
Produkt designation:	Water treatment device
Model types:	ENK-01 Quattro Power ENK-02 Quattro Power ENK-03 Quattro Power ENK-04 Quattro Power

These products comply with the provisions of the following directives:

2014/35/EG	**Low Voltage Directive**
2014/30/EU	**Electromagnetic Compatibility Directive**

Applied harmonised standards or other technical specifications:

IEC 61000-6-2:2016
IEC 61000-6-3:2020 in conjunction with
IEC 61000-3-2:2018
IEC 61000-3-2:2018/AMD1:2020
IEC 61000-3-3:2013
IEC 61000-3-3:2013/AMD1:2017
IEC 61000-3-3:2013/AMD2:2021
EN 60335-1:2012
EN 62233:2008

Compliance is demonstrated by adherence to the applicable standards.

CH-5413 Birmenstorf, 01.01.2025

(Legally binding signature of issuer)

6.0 Warranty Terms

The supplier guarantees, for a period of 10 years from the date of invoice or installation (whichever comes first), to repair or replace any parts that are proven to be defective due to faulty materials or poor workmanship, at their discretion and as quickly as possible. The warranty period is not extended by the use of warranty services.

The warranty is valid only if the product is installed, used, and operated correctly and professionally. All security seals must remain intact, and any defective components must be returned freight-paid either to the supplier or to a designated service location. Replaced parts become the property of Tratson AG.

All further claims by the customer arising from a defective product – particularly compensation claims or withdrawal from the contract – are excluded. The supplier expressly disclaims any additional liability for direct, indirect, or consequential damages of any kind.

Copyright Notice:
All data, graphics, and content of this operating manual are the copyrighted property of Tratson AG and may not be reproduced in whole or in part or used for any other purpose without prior written permission.